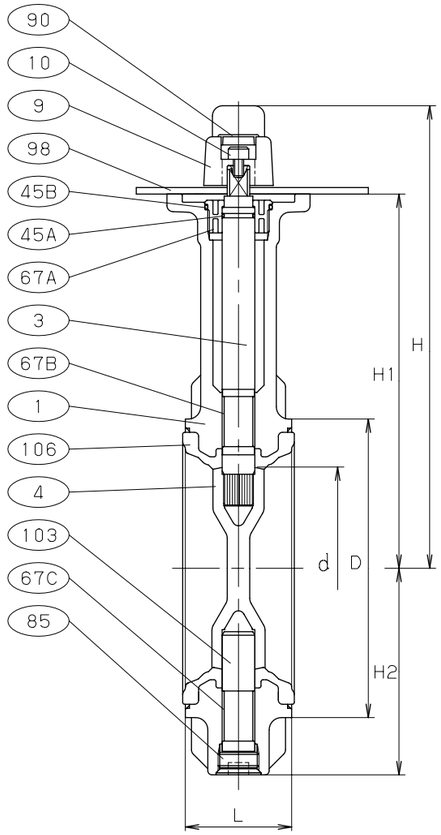

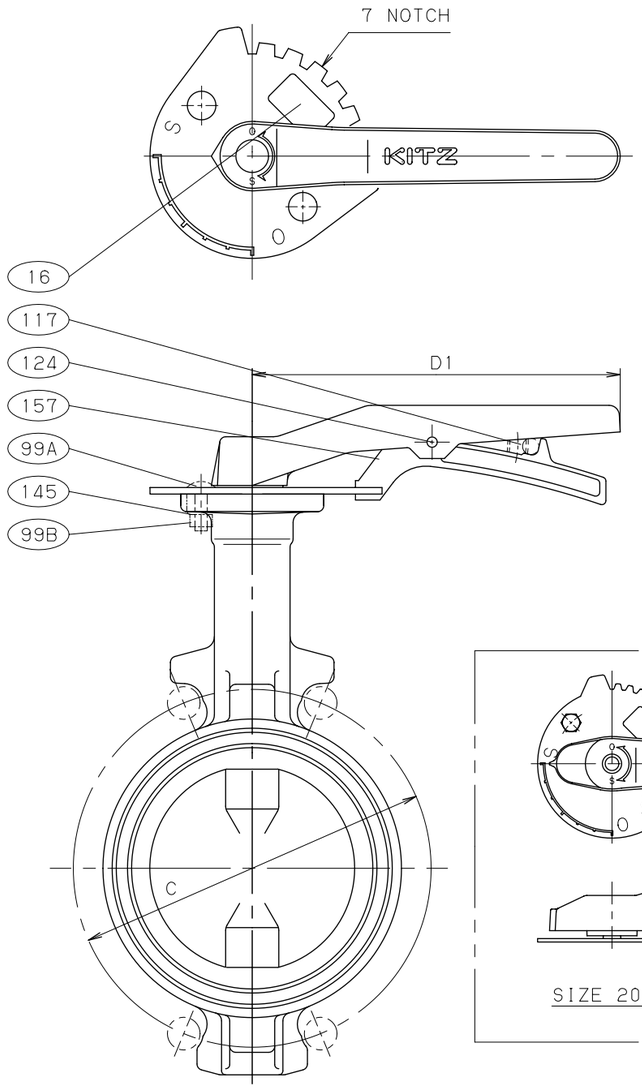

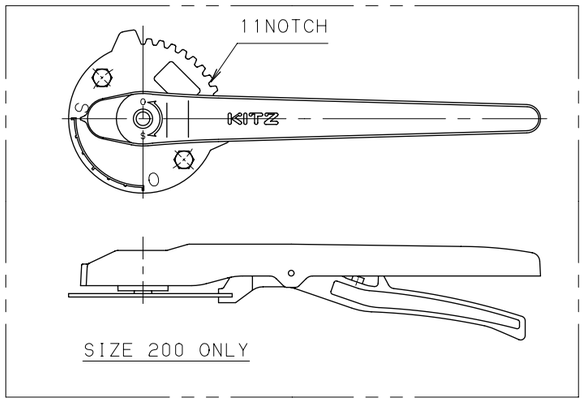

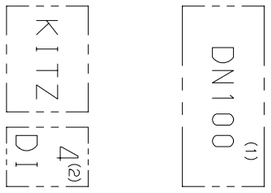

ONE SIDE THE OTHER SIDE

MARKING ON THE BODY

DIMENSIONS

UNIT:mm

NOMINAL SIZE A	NOMINAL SIZE B	d	H	H1	H2	L	D	C 5K	C 10K	D1	APPROX. MASS (kg)	
50	2	50	191	147	67	43	90	105	120	180	1.9	
65	2.1/2	65	199	155	75	46	104	130	140	180	2.3	
80	3	80	217	173	91	46	124	145	150	180	3.2	
100	4	100	227	183	101	52	146	165	175	180	3.5	
125	5	125	265	211	127	56	176	200	210	230	5.8	
150	6	150	277	223	139	56	206	230	240	230	8.0	
200	8	197	295	248	169	60	257	280	290	350	13	

NOTE (1) VALVE SIZE (A) IDENTIFICATION.
(2) VALVE SIZE (B) IDENTIFICATION.
(3) CHROMATE COATING.
(4) VULCANIZED TO THE BODY.

NO	NAME OF PARTS	QTY	MATERIALS	SPECIFICATIONS
				ASTM SPEC.
1	BODY	1	DUCTILE IRON	A536 Gr.65-45-12
3	STEM	1	STAINLESS STEEL	AISI 410
4	DISC	1	STAINLESS STEEL	A351 Gr. CF8
9	HANDLE	1	ALUMINUM DIE-CAST	
10	HANDLE BOLT	1	CARBON STEEL	
16	NAME PLATE	1	ALUMINUM	
45A	O RING	1	EPDM	
45B	O RING	1	EPDM	
67A	BEARING	1	POLYACETAL	
67B	STEM BEARING	1	G/F PTFE	
67C	STEM BEARING	1	G/F PTFE	
85	PLUG	1	ZINC DIE-CAST (3)	B86
90	CAP	1	P. V. C	
98	INDEX PLATE	1	ALUMINUM	
			(SIZE 50-150)	
		1	CARBON STEEL	
			(SIZE 200 ONLY)	
99A	SET BOLT	2	CARBON STEEL	
99B	NUT	2	CARBON STEEL	
103	BOTTOM STEM	1	STAINLESS STEEL	AISI 410
106	SEAT RUBBER (4)	1	EPDM	
117	HANDLE SPRING	1	STAINLESS STEEL	
124	SPRING PIN	1	STAINLESS STEEL	
145	SPRING WASHER	2	CARBON STEEL	
157	STOP LEVER	1	ALUMINUM	

STANDARD	FACE TO FACE OR END TO END	JIS B2032 46 SERIES
	END CONNECTION	WAFER TYPE (JIS 5, 10K)
	WALL THICKNESS	KITZ STANDARD
	PRESSURE TEST	JIS B2032
	PRODUCT CODE	
	FIGURE	10DJUE<Z0P36>

10K DUCTILE IRON BUTTERFLY VALVES

LEVER OPERATED.

DATE APPD	JUL.19'19	DRAWING NO	△		
APPD BY	H. NAKAGAWA	947-A20240	△		
CHKD BY	Y. ASANO		△		
DSGND BY	F. AKAHANE		△		
DRAWD BY	E. TONEGAWA	REV-02	MARK	DATE	BY

KITZ CORPORATION

KITZ